EXCEPT AS OTHERWISE PROVIDED BY CONTRACT, THIS DRAWING AND SPECIFICATIONS SHALL NOT BE REPRODUCED, COPIED OR USED AS THE BASIS FOR MANUFACTURE OR SALE OF MATTER DEPICTED HEREIN WITHOUT THE EXPRESSED WRITTEN PERMISSION OF THE CLAUDE LAVAL CORPORATION, OR ITS ASSIGNEES.

THIS DRAWING HAS BEEN GENERATED AND IS MAINTAINED BY A CAD SYSTEM. CHANGES SHALL ONLY BE INCORPORATED AS DIRECTED BY AN APPROVED ENGINEERING CHANGE ORDER (ECO).
PAPER COPIES ARE UNCONTROLLED.

REVISIONS

ECN	REV.	DESCRIPTION	DATE	APPROVED

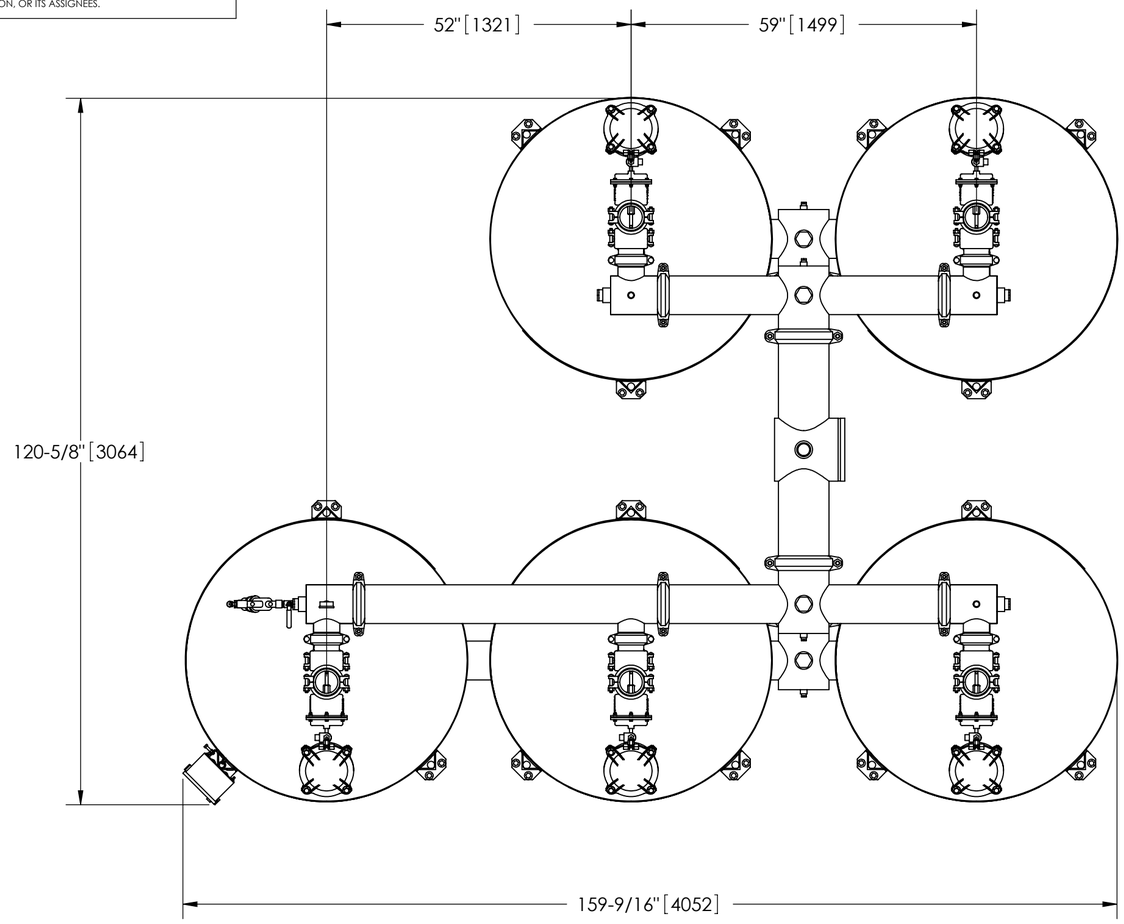

NOTES:

1. INLET & OUTLET ARE 10" GROOVED PIPE.
2. MAXIMUM PRESSURE: 80 psi (5.6 bar).
3. MAXIMUM TEMPERATURE: 100°F (37.8°C).
4. RATED FLOWRATE: 940-1550 gpm (213-352 m³/hr).
5. FILTRATION AREA: 62.8 ft² (5.8 m²).
6. MEDIA SAND REQUIREMENT: 6500 lbs (2948 kg).
7. SYSTEM WEIGHT (WITHOUT SAND): 1814 lbs (823 kg).
8. SYSTEM COMPONENTS SHIPPED LOOSE. FINAL ASSEMBLY BY OTHERS.

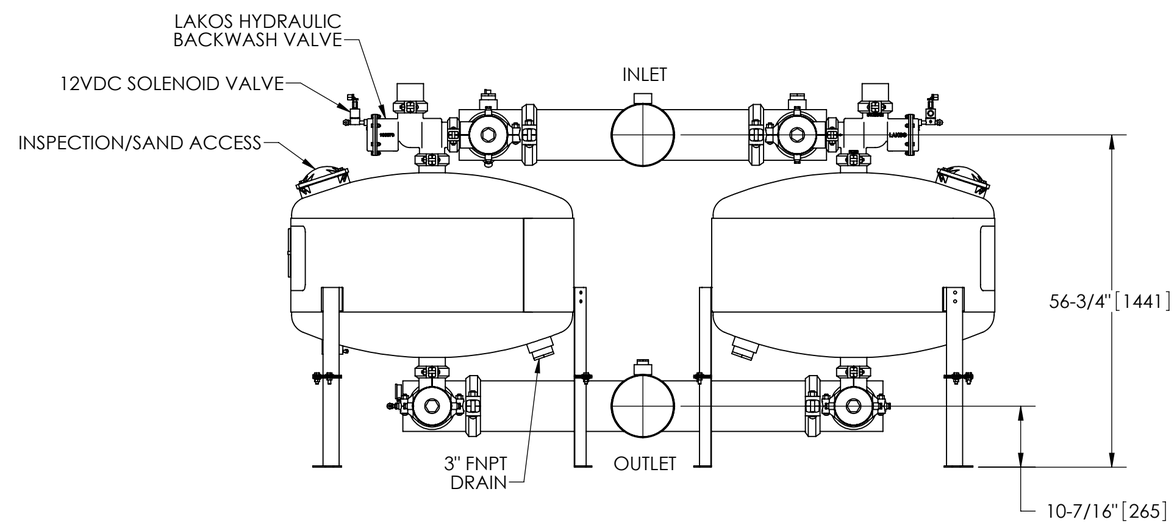

SIDE VIEW

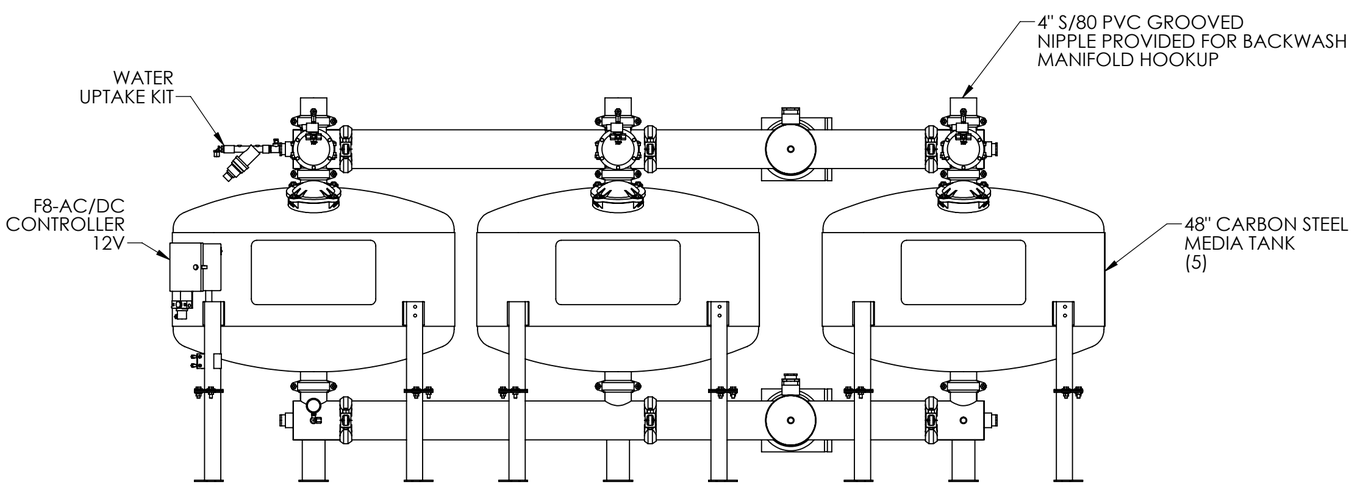

SUBMITTAL DRAWING

This drawing is submitted for spatial consideration only. Do not pre-plumb to these dimensions.

UNLESS OTHERWISE SPECIFIED: DIMENSIONS ARE IN: INCHES [mm] TOLERANCES ARE: FRACTIONS ± 1/4" DECIMALS .XX ± .01 .XXX ± .005 .XXXX ± .0005 ANGLES ± 1/4°	ENGINEERED FOR: STANDARD	LAKOS	CLAUDE LAVAL CORP. FRESNO, CALIFORNIA 93727 WWW.LAKOS.COM — LAVAL UNDERGROUND SURVEYS
DO NOT SCALE DRAWING	APPROVALS / DATE	TITLE	PROII-4810-5A/H, SYSTEM 48" 5 TANK MEDIA, AUTO "H" FEED
MATERIAL: PER LAKOS SPEC	DRAWN: AMF — 12/1/08		
	ENGR: - — -		
FINISH: AS ASSEMBLED	MFG: - — -	SIZE: C	MODEL NO.
	WORK ORDER — QTY.	DWG NO.: PROII-4810-5A/H	REV.: 01
		SCALE: 1:20	EST. WT.: 1814 lb — SHEET: 1 OF 1

DWG NO. XXX — SH 1 — REV. 01