EXCEPT AS OTHERWISE PROVIDED BY CONTRACT, THIS DRAWING AND SPECIFICATIONS SHALL NOT BE REPRODUCED, COPIED OR USED AS THE BASIS FOR MANUFACTURE OR SALE OF MATTER DEPICTED HEREIN WITHOUT THE EXPRESSED WRITTEN PERMISSION OF THE CLAUDE LAVAL CORPORATION, OR ITS ASSIGNEES.

REVISIONS				
ZONE	REV.	DESCRIPTION	DATE	APPROVED

NOTES:

1. INLET & OUTLET FLANGES ARE 3/4" 150# RF PER ANSI B16.5 REQUIRING 4X ∅1/2" BOLTS (BOLTS AND GASKETS NOT INCLUDED).
2. MAXIMUM PRESSURE: 100 psi (6.9 bar).
3. MAXIMUM TEMPERATURE: 400°F (204°C).
4. PRESSURE LOSS: 3-12 psi (.2-.8 bar) AT RATED FLOW.
5. RATED FLOW: 10-25 gpm (1-3 m³/hr).
6. APPROXIMATE DRY WEIGHT: 84 lbs (38 kg).
7. FINISH: LAKOS BLUE (EXTERIOR ONLY).
8. GASKETS: SPIRAL WOUND, 304 SS W/PTFE FILLER.

THIS DRAWING HAS BEEN GENERATED AND IS MAINTAINED BY A CAD SYSTEM. CHANGES SHALL ONLY BE INCORPORATED AS DIRECTED BY AN APPROVED ENGINEERING CHANGE ORDER (ECO).
PAPER COPIES ARE UNCONTROLLED.

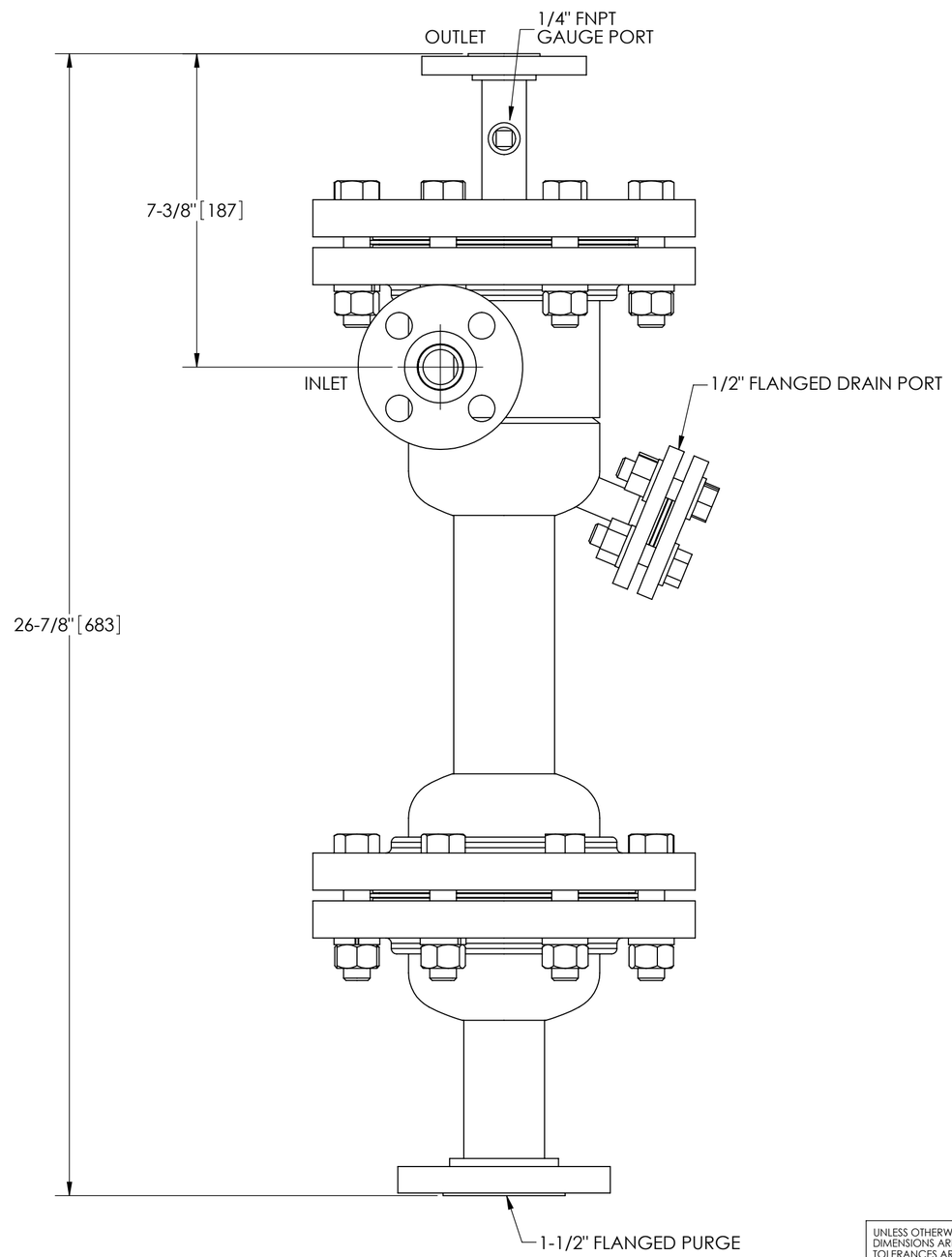

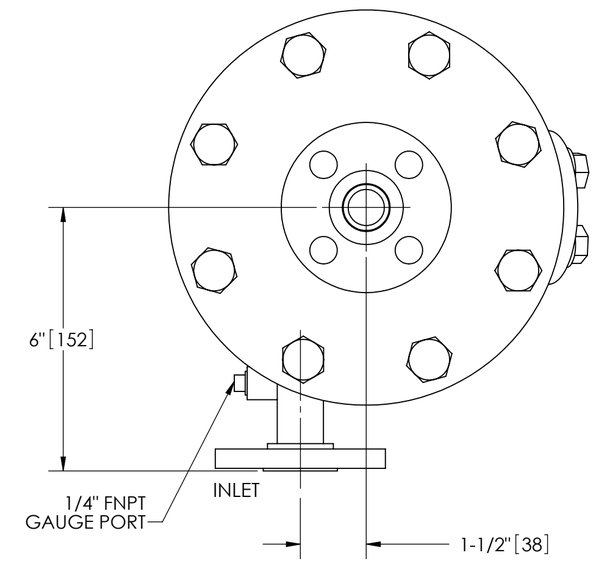

TOP VIEW

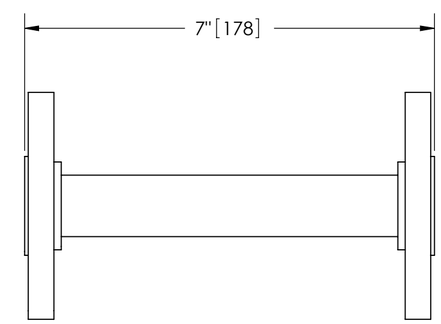

FLANGED SPOOOL

MODEL FS-0075 (AVAILABLE SEPARATELY)
REQUIRED FOR REMOVAL OF TOP ASSEMBLY

SUBMITTAL DRAWING

This drawing is submitted for spatial consideration only. Do not pre-plumb to these dimensions.

UNLESS OTHERWISE SPECIFIED: DIMENSIONS ARE IN: INCHES [mm] TOLERANCES ARE: FRACTIONS ± 1/4" DECIMALS .XX ± .01 .XXX ± .005 .XXXX ± .0005 ANGLES ± 1/4°	ENGINEERED FOR: STANDARD	LAKOS CLAUDE LAVAL CORP. FRESNO, CALIFORNIA 93727 WWW.LAKOS.COM	LAVAL UNDERGROUND SURVEYS
DO NOT SCALE DRAWING	APPROVALS / DATE	TITLE CSX-0010-HV, SEPARATOR 10-25 gpm, CARBON STEEL	
MATERIAL CLASS P-1 MILD CARBON STEEL	DRAWN MQ 4/19/12		
	ENGR - -		
FINISH LAKOS BLUE	MFG - -	SIZE C / MODEL NO. / DWG NO. 118169 / REV. B	
	WORK ORDER / QTY.	SCALE 3:8 / EST. WT. 84 lb / SHEET 1 OF 1	

DWG NO. 118169 SH 1 REV. B