EXCEPT AS OTHERWISE PROVIDED BY CONTRACT, THIS DRAWING AND SPECIFICATIONS SHALL NOT BE REPRODUCED, COPIED OR USED AS THE BASIS FOR MANUFACTURE OR SALE OF MATTER DEPICTED HEREIN WITHOUT THE EXPRESSED WRITTEN PERMISSION OF THE CLAUDE LAVAL CORPORATION, OR ITS ASSIGNEES.

THIS DRAWING HAS BEEN GENERATED AND IS MAINTAINED BY A CAD SYSTEM. CHANGES SHALL ONLY BE INCORPORATED AS DIRECTED BY AN APPROVED ENGINEERING CHANGE ORDER (ECO).
PAPER COPIES ARE UNCONTROLLED.

REVISIONS				
ZONE	REV.	DESCRIPTION	DATE	APPROVED

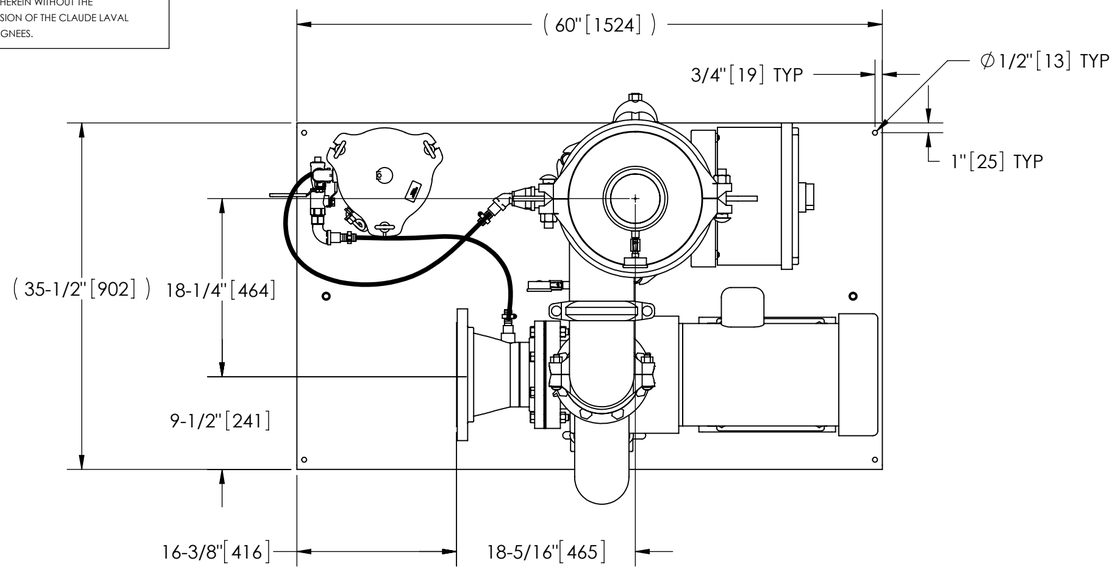

TOP VIEW

NOTES:

1. INLET IS 8" PIPE (125# ANSI FLANGED).
2. OUTLET IS 6" PIPE (GROOVED).
3. PURGE OUTLET IS 1-1/2" PIPE.
4. MAXIMUM PRESSURE: 150 psi (10.3 bar).
5. MAXIMUM TEMPERATURE: 100ºF (37.8ºC).
6. SPECIFIED FLOWRATE OF 825 gpm (187 m³/hr).
7. FINISH: AS ASSEMBLED.
8. POWER REQUIREMENT: 460V, 3PH, 60Hz.
9. NEMA 4X MOTOR STARTER ENCLOSURE WITH SAFETY DISCONNECT AND H.O.A. SWITCH.
10. APPROXIMATE DRY WEIGHT: 1973 lbs (894 kg).
11. INLET/OUTLET VALVE KIT, MODEL TCV-0280 RECOMMENDED.
12. MINIMUM PIPE TO TB SYSTEM IS 8" PIPE.
13. FLOODED SUCTION REQUIRED.

COMPONENT LIST:

1. ELECTRICAL CONTROL BOX 460V 60Hz W/120V TRANSFORMER.
2. SEPARATOR: HTX-0450-TC.
3. PUMP: 20 HP CENTRIFUGAL, 1750 rpm, 460V, 60Hz.
4. INLET/OUTLET PRESSURE GAUGES: 0-100 psi, GLYCERIN-FILLED.
5. PURGE EQUIPMENT: SRV-816.
6. DIFFERENTIAL PRESSURE INDICATOR: (AVAILABLE WITH DRY DRY CONTACT- MODEL DEC-0100. ORDER SEPARATELY).

SUBMITTAL DRAWING

This drawing is submitted for spatial consideration only. Do not pre-plumb to these dimensions.

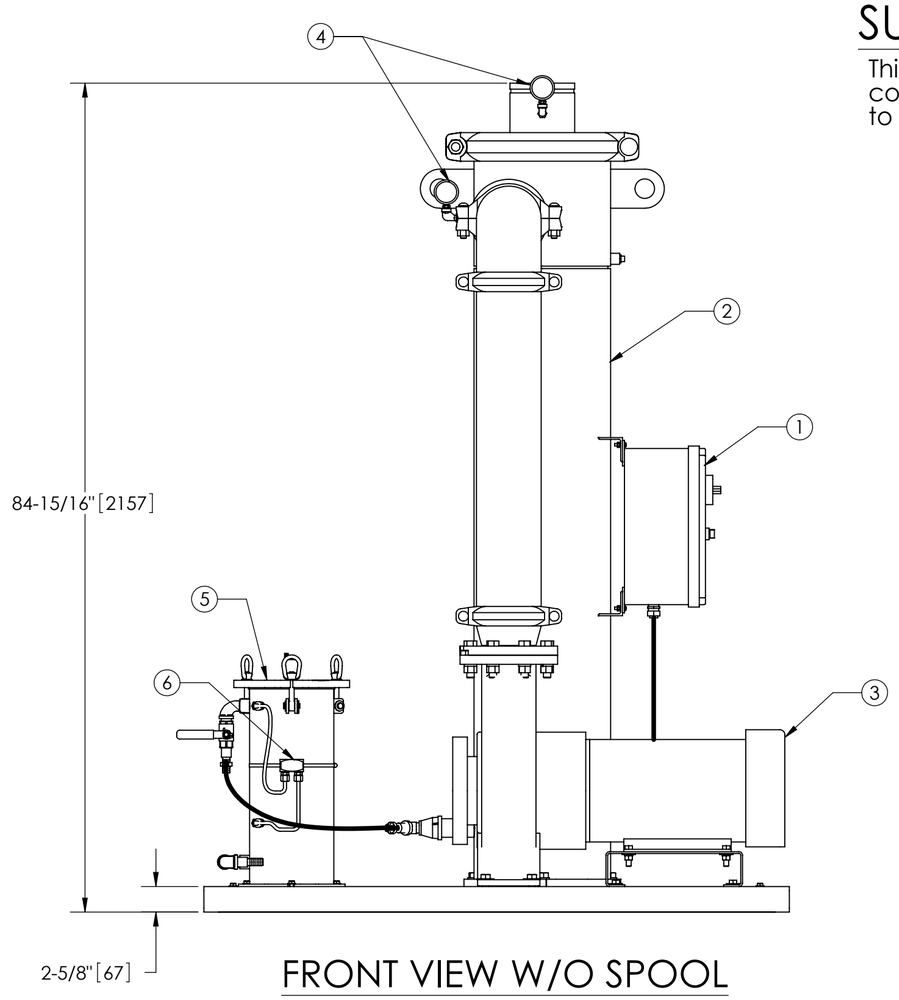

FRONT VIEW W/O SPOOL

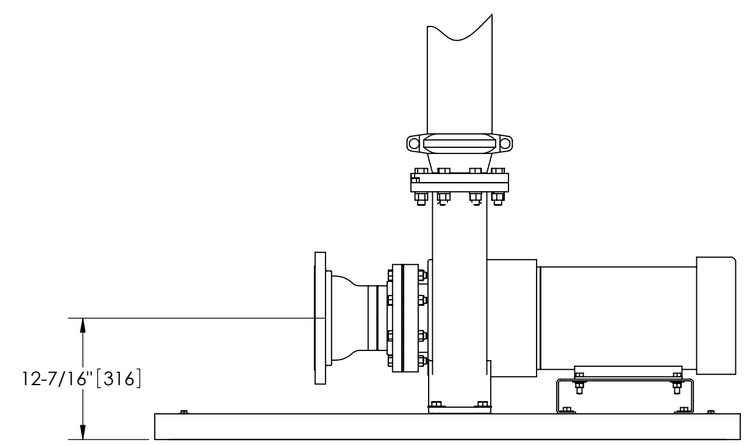

FRONT VIEW PUMP AND SPOOL

UNLESS OTHERWISE SPECIFIED: DIMENSIONS ARE IN: INCHES [mm] TOLERANCES ARE: FRACTIONS ± 1" DECIMALS .XX ± .01 .XXX ± .005 .XXXX ± .0005 ANGLES ± 1/4°	ENGINEERED FOR: 29376-3-07		
DO NOT SCALE DRAWING	APPROVALS		DATE
MATERIAL PER LAKOS SPEC	DRAWN	DLW	4/29/05
	ENGR	DLW	8/29/07
FINISH AS ASSEMBLED	MFG	-	-
	WORK ORDER		QTY.

LAKOS. CLAUDE LAVAL CORP. FRESNO, CALIFORNIA 93727 WWW.LAKOS.COM — LAVAL UNDERGROUND SURVEYS

TITLE: TBX-0825-SRV, TC SYSTEM, SIDESTREAM HTX-O450, 460V 60HZ DELUXE

SIZE	MODEL NO.	DWG NO.	REV.
C		115469	C
SCALE 1:12		EST. WT. 1973 lb	SHEET 1 OF 1

DWG NO. 115469 SH REV. C