EXCEPT AS OTHERWISE PROVIDED BY CONTRACT, THIS DRAWING AND SPECIFICATIONS SHALL NOT BE REPRODUCED, COPIED OR USED AS THE BASIS FOR MANUFACTURE OR SALE OF MATTER DEPICTED HEREIN WITHOUT THE EXPRESSED WRITTEN PERMISSION OF THE CLAUDE LAVAL CORPORATION, OR ITS ASSIGNEES.

THIS DRAWING HAS BEEN GENERATED AND IS MAINTAINED BY A CAD SYSTEM. CHANGES SHALL ONLY BE INCORPORATED AS DIRECTED BY AN APPROVED ENGINEERING CHANGE ORDER (ECO).
PAPER COPIES ARE UNCONTROLLED.

SUBMITTAL DRAWING

This drawing is submitted for spatial consideration only. Do not pre-plumb to these dimensions.

REVISIONS				
ECN	REV.	DESCRIPTION	DATE	APPROVED

NOTES:

1. INLET & OUTLET FLANGES ARE 6" 150# RF PER ANSI B16.5 REQUIRING 8X ∅3/4" BOLTS (BOLTS AND GASKETS NOT INCLUDED).
2. MAXIMUM PRESSURE: 150 psi (10.3 bar).
3. MAXIMUM TEMPERATURE: 180°F (82°C).
4. PRESSURE LOSS: 3-15 psid (.21-1.03 bar) AT RATED FLOW.
5. RATED FLOW: 550-1200 gpm (125-273 m³/hr).
6. APPROXIMATE DRY WEIGHT: 1123 lbs (500 kg).
7. FINISH: POWDERCOAT LAKOS MEDIUM GRAY RAL-7005 (EXTERIOR ONLY).
8. CERTIFIED UNDER NSF/ANSI STANDARD NSF 61 & ANNEX G.

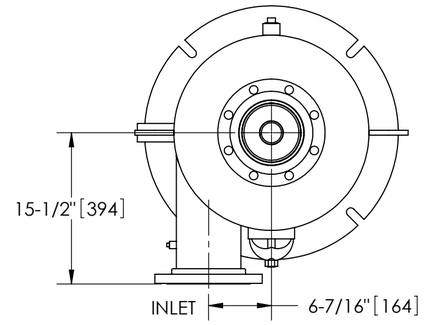

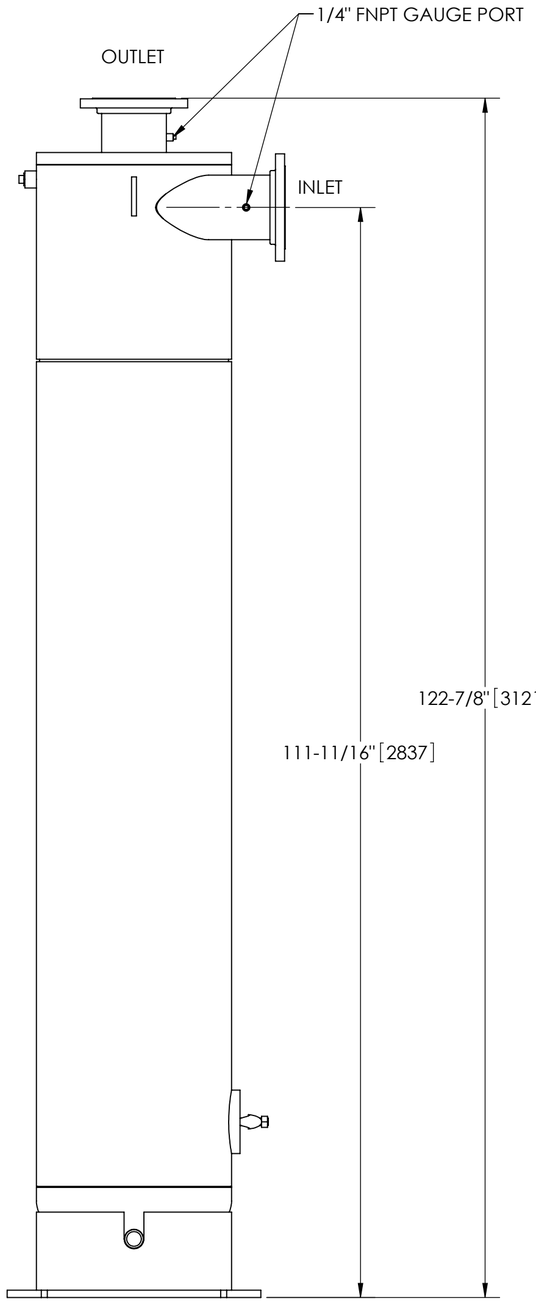

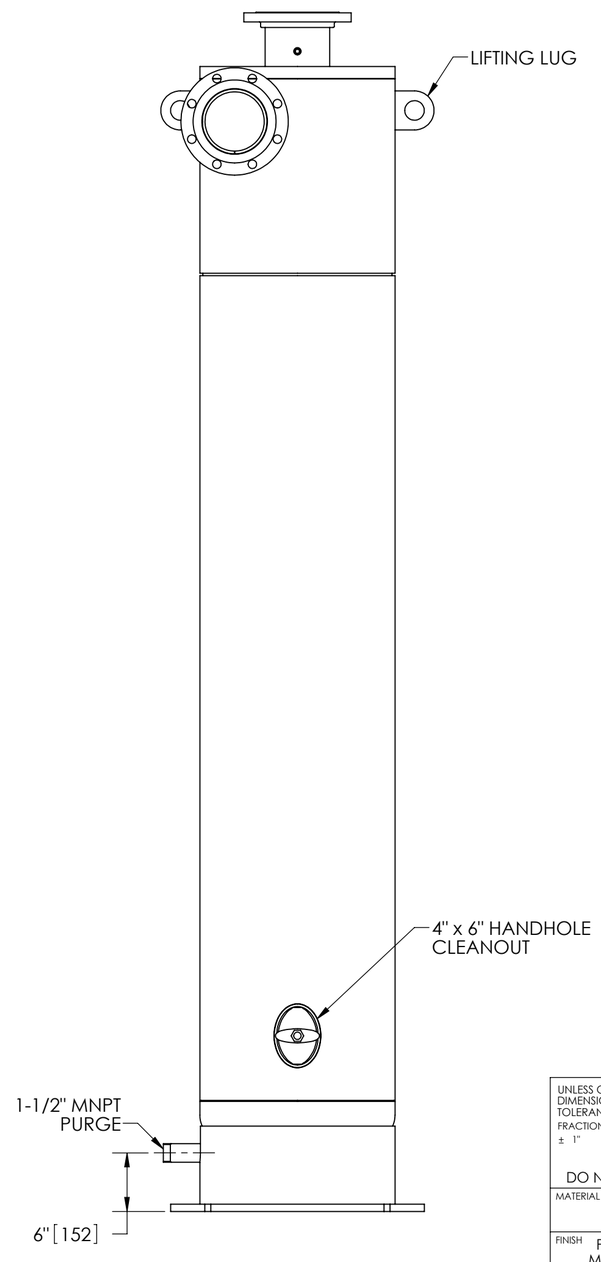

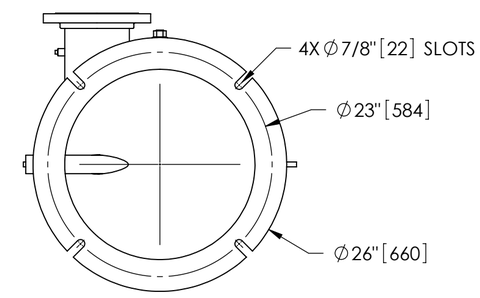

BOTTOM VIEW

UNLESS OTHERWISE SPECIFIED: DIMENSIONS ARE IN: INCHES [mm] TOLERANCES ARE: FRACTIONS ± 1" DECIMALS .XX ± .01 .XXX ± .005 .XXXX ± .0005 ANGLES ± 1/4°	ENGINEERED FOR: STANDARD		LAKOS. CLAUDE LAVAL CORP. FRESNO, CALIFORNIA 93727 WWW.LAKOS.COM
DO NOT SCALE DRAWING	APPROVALS	DATE	TITLE PWC-1060-V, SEPARATOR, 550-1200 GPM, CARBON STEEL
MATERIAL CLASS P-1 MILD CARBON STEEL	DRAWN JBI	8/24/11	
	ENGR -	-	
FINISH POWDERCOAT LAKOS MEDIUM GRAY RAL-7005	MFG -	-	SIZE C / MODEL NO. / DWG NO. 133380 / REV. C
	WORK ORDER	QTY.	SCALE 1:12 / EST. WT. 1123 lb / SHEET 1 OF 1

DWG NO. 133380 SH 1 REV. C