Centrifugal-Action Separators for Low-Flow Applications
Carbon Steel (ILB) or Stainless Steel (ILS) construction

ILB

Ideally suited for small system applications, side-stream installations and individual equipment protection. LAKOS ILB/ILS Separators are the popular choice for removing sand, grit and other fine solids from source of process water/liquid systems, removing 98% of such particles 200 mesh (74 microns) and larger (see maximum particle sizes, page 3). With heavier solids (metal chips, lead, etc.), expect even better results. Its unique centrifugal style of filtration is not only efficient, but also trouble-free, boasting these standard features:

No moving parts to wear out

This eliminates mechanical failures and troublesome replacement parts.

No screens, cartridges, cones or filter elements to clean or replace

Saves labor, reduces downtime and eliminates the ordering and stocking of spare parts.

No backflushing

Minimizes water/liquid loss. Zero liquid loss options available.

No downtime requirements

All units are designed to operate continuously with no routine shutdowns for cleaning or maintenance. Purging of separated solids may be performed during full operation with no loss of performance (see page 2).

Low pressure loss

Consistent with the system's flow rate, LAKOS Separators typically require no more than 5-12 psi (0.3 - 0.8 bar) loss for effective solids removal without troublesome pressure fluctuations.

Available in two standard materials of construction

LAKOS ILB/ILS Separators are available in either carbon steel or stainless steel. Each has distinct qualities with regard to corrosion, pressure and cost.

LAKOS ILB/ILS Separators. The simple, easy-to-use solution for a wide variety of solids-from-liquids problems.

Clamp-on support legs available as an option.

Carbon Steel ILB Separator

Stainless Steel ILS Separator

Flow range:
3-290 U.S. gpm
(.7 - 66 m^3/hr) per unit

Maximum standard pressure rating:
150 psi (10.3 bar)

LAKOS®
Separators and Filtration Solutions

Maintenance/Purging

LAKOS ILB/ILS Separators must be purged regularly to remove the separated solids from the temporary collection chamber.

All purge hardware should be installed prior to any elbow or turns in the purge piping.

Avoid "uphill" purging, which can clog purge piping and hinder effective solids evacuation.

For best results, purging is recommended while the LAKOS Separator is in operation, utilizing system pressure to enhance solids evacuation.

LAKOS offers a durable, reliable automatic purging system to eliminate routine maintenance. Frequency of purging and duration of purging are both programmable to accommodate the specific needs of virtually any application.

Be sure to include an isolation valve prior to the automatic valve (available from LAKOS at an additional cost) to facilitate servicing of the automatic valve without system shut down.

Lakos Separators are manufactured and sold under one or more of the following U.S. Patents: 5,320,747; 5,338,341; 5,368,735; 5,425,876; 5,571,416; 5,578,203; 5,622,545; 5,653,874; 5,894,995; 6,090,276; 6,143,175; 6,167,960; 6,202,543; 7,000,782; 7,032,760 and corresponding foreign patents, other U.S. and foreign patents pending.

How It Works

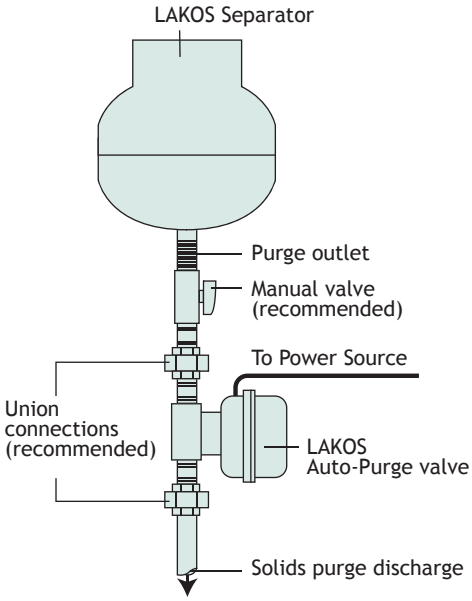

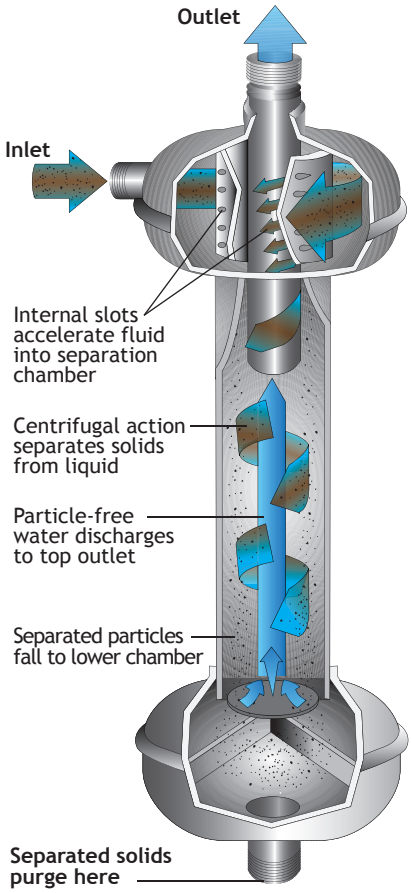

Application Photos

ILB removes solids in a food processing plant.

An ILB removes sand before it enters a residence.

ILS used to remove solids from water supply system for a large grocery store.

ILB/ILS

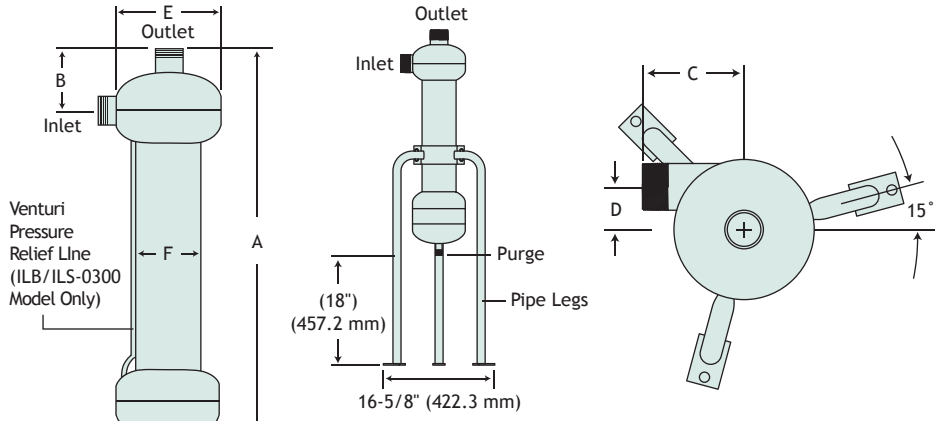

Dimensions

Model	A in	A mm	B in	B mm	C in	C mm	D in	D mm	E in	E mm	F in	F mm
ILB/ILS-0037	16-1/2	419	3	76	3-5/8	86	1-5/8	41	4	102	1-21/32	42
ILB/ILS-0050	20	508	4	102	4	102	2-1/4	57	6	152	1-7/8	48
ILB/ILS-0075	20	508	4	102	4	102	2-1/8	54	6	152	2-3/8	60
ILB/ILS-0100	30	762	4-3/8	111	4	102	2	51	6	152	3-1/2	89
ILB/ILS-0125	30	762	4-3/8	111	4	102	1-7/8	48	6	152	3-1/2	89
ILB/ILS-0150	30	762	4-3/8	111	4-3/4	121	1-3/4	44	6	152	3-1/2	89
ILB/ILS-0200	33-5/8	854	5	127	5-1/2	140	2-5/8	67	8-5/8	219	5-9/16	141
ILB/ILS-0250	37	940	5-1/2	140	6-1/4	159	2-5/8	67	8-5/8	219	5-9/16	141
ILB/ILS-0300	42	1067	7	178	8-1/4	209	3-1/4	83	10-3/4	273	6-5/8	168

Dimensions for reference only. Consult factory when pre-plumbing.

Specifications

Model	Flow Range U.S. gpm	Flow Range m^3/hr	Inlet/Outlet Size male N.P.T.*	Weight lbs.	Weight kg	Weight with Water lbs.	Weight with Water kg
ILB/ILS-0037	3-6	.7-1.5	3/8"	9	4.1	19	8.6
ILB/ILS-0050	4-10	1.0-2.5	1/2"	14	6.3	20	9.1
ILB/ILS-0075	10-20	2.5-4.5	3/4"	15	6.8	25	11.3
ILB/ILS-0100	19-32	4.5-7.5	1"	27	12.2	38	17.2
ILB/ILS-0125	28-48	6.5-11.0	1-1/4"	27	12.2	38	17.2
ILB/ILS-0150	45-70	10.0-16.0	1-1/2"	27	12.2	40	18.1
ILB/ILS-0200	65-108	14.5-24.5	2"	52	23.6	98	44.4
ILB/ILS-0250	95-155	21.5-35.0	2-1/2"	60	27.2	109	49.4
ILB/ILS-0300	148-290	33.5-66.0	3"	101	45.8	177	80.0

*Also available in BSP or JIS threads. Consult factory for details.

Flow vs. Pressure Loss

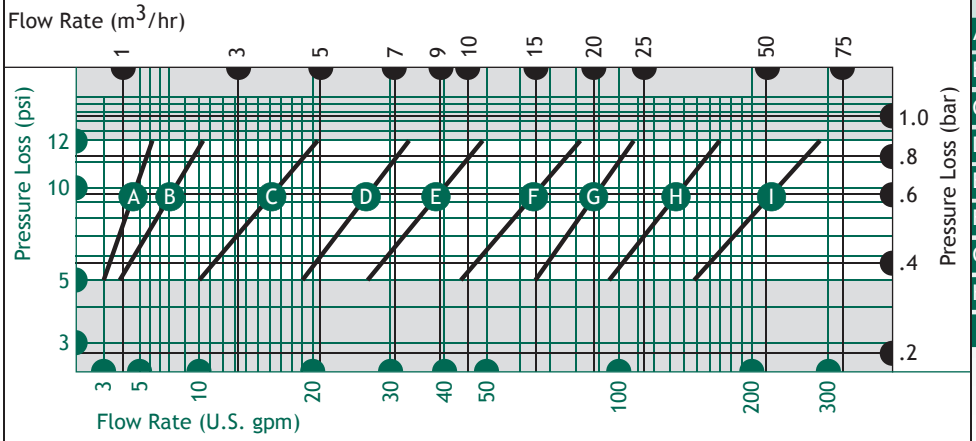

Maximum Pressure Rating:

150 psi (10.3 bar)

Pressure Loss Range:

5 - 12 psi (0.3 - 0.8 bar)

Purge Size (all models):

3/4" N.P.T., male

Maximum Particle Size:

ILB/ILS-0037 - 1/4" (6.35 mm)
ILB/ILS-0050 - 1/4" (6.35 mm)
ILB/ILS-0075 - 1/4" (6.35 mm)
ILB/ILS-0100 - 1/4" (6.35 mm)

All other models: 3/8" (9.25 mm)

Collection Chamber Capacity:

ILB/ILS-0200 - 0.8 U.S. gal (3.03 liters)
ILB/ILS-0250 - 1.25 U.S. gal (4.73 liters)
ILB/ILS-0300 - 2.2 U.S. gal (8.33 liters)

All other models: 0.3 U.S. gal (1.2 liters)

A ILB/ILS-0037
B ILB/ILS-0050
C ILB/ILS-0075
D ILB/ILS-0100
E ILB/ILS-0125
F ILB/ILS-0150
G ILB/ILS-0200
H ILB/ILS-0250
I ILB/ILS-0300

Limited Warranty

All products manufactured and marketed by this corporation are warranted to be free of defects in material or workmanship for a period of at least one year from date of delivery. Extended warranty coverage applies as follows:

All LAKOS ILB/ILS Separators: Five year warranty

All other components: 12 months from date of installation; if installed 6 months or more after ship date, warranty shall be a maximum of 18 months from ship date.

If a fault develops, notify us, giving a complete description of the alleged malfunction. Include the model number(s), date of delivery and operating conditions of subject product(s). We will subsequently review this information and, at our option, supply you with either servicing data or shipping instruction and returned materials authorization. Upon prepaid receipt of subject product(s) at the instructed destination, we will then either repair or replace such product(s), at our option, and if determined to be a warranted defect, we will perform such necessary product repairs or replace such product(s) at our expense.

This limited warranty does not cover any products, damages or injuries resulting from misuse, neglect, normal expected wear, chemically-caused corrosion, improper installation or operation contrary to factory recommendation. Nor does it cover equipment that has been modified, tampered with or altered without authorization.

No other extended liabilities are stated or implied and this warranty in no event covers incidental or consequential damages, injuries or costs resulting from any such defective product(s).

1365 North Clovis Avenue
Fresno, California 93727 USA
Telephone: (559) 255-1601
FAX: (559) 255-8093
www.lakos.com
info@lakos.com

Sample Specifications

Separator Type & Performance
The removal of specific unwanted solids from a pumped/pressurized liquid system shall be accomplished with a centrifugal-action vortex separator. Solids removal efficiency is principally predicated on the difference in specific gravity between the solids and the liquid. Performance is expected to be 98% removal of 74 microns and larger, with significant particle removal of finer particles also likely.

Performance Requirement
Separator performance must be supported by published independent test results from a recognized and identified test agency. Standard test protocol of upstream injection, downstream capture and separator purge recovery is allowed with 50-200 mesh particles to enable effective, repeatable results. Single-pass test performance must not be less than 95% removal. Model tested must be of the same flow-design series as specified unit.

Separator Design & Function
A tangential inlet and mutually tangential internal accelerating slots shall be employed to promote the proper velocity necessary for the removal of the separable solids. The separator's internal vortex shall allow this process to occur without wear to the accelerating slots.

Separated particle matter shall spiral downward along the perimeter of the inner separation barrel, in a manner that does not promote wear of the separation barrel, and into the solids collection chamber, located below the vortex deflector stool.

System liquid shall exit the separator by following the center vortex in the separation barrel and spiral upward to the separator outlet.

Purging *(specified option only)*
Evacuation of separated solids shall be accomplished automatically, employing a timer-activated motorized ball valve. Straight-through valve design, with bronze valve body (also available optionally as a stainless steel valve body) and stainless steel ball in a teflon seat. NEMA 4 housing for indoor or outdoor installation. Valve size: _____

Separator Details
A. Inlet & outlet shall be male, NPT (other options available), size: _____
B. Purge outlet shall be male, NPT (other options available), size: _____
C. The separator shall operate within a flow range of: _____
D. Pressure loss shall be between 5-12 psi (0.3 - 0.8 bar), consistent with the above flow range.

Separator Construction
The separator shall be fabricated of carbon steel (stainless steel is optional with ILS model) with shell material and head material of 0.135 inch wall or better. Maximum operating pressure shall be 150 psi (10.3 bar), unless specified otherwise.

Paint coating shall be acrylic urethane, spray-on, royal blue.

Separator Source & Identification
The separator shall be manufactured by LAKOS Filtration Systems, a division of Claude Laval Corporation in Fresno, California USA. Specific model designation is: _____.

Printed on recycled paper LS-289EE (Rev. 6/12)

LAKOS®
Separators and Filtration Solutions