SideStreamClean Systems

Packaged Separator Systems for Side Stream Condenser, Chilled and Hot Water Applications

designed to remove solids from liquids

Optimize Heat Transfer Efficiency!

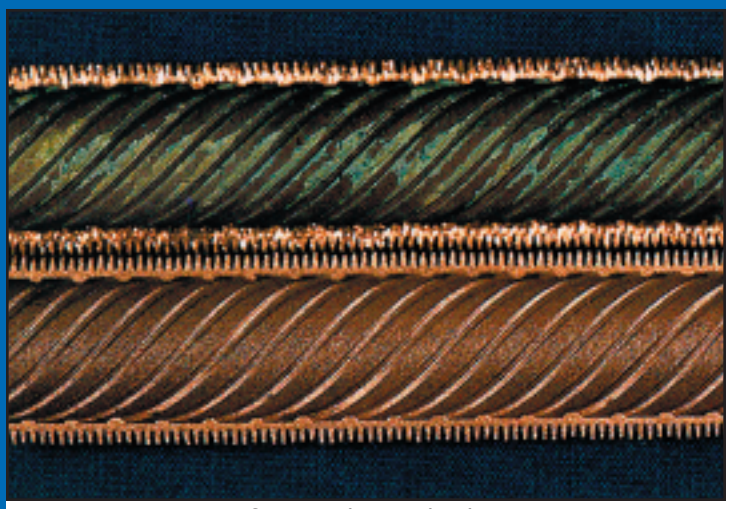

Cutaway views of two enhanced tubes, one BEFORE filtration (top) and the other AFTER filtration

Flow Range:	Standard Pressure Rating:
30-1100 U.S. gpm*	150 psi on TBI/TBX
(7-250 m^3/hr)	(10.3 bar)

*Contact LAKOS for higher flow rate options

TBX Series with accessible separators

Solids Recovery Vessel

Energy Efficient, Environmentally Friendly Designs: LAKOS Filtration Systems

- *Save energy*
- *Reduce biofouling and health risks*
- *Minimize maintenance & downtime*
- *Helps to prevent underdeposit corrosion in piping and heat exchangers*
- *Protect the environment and natural resources*
- *Optimize the effectiveness of water treatment programs*
- *Maximize equipment life*
- *Zero liquid loss for closed loop systems*

TBI Series with non-accessible separators

Automatic Purge Valve (optional equipment)

LAKOS is a proud member of ASHRAE, BOMA and the U.S. Green Building Council

LAKOS®
Separators and Filtration Solutions

Typical Installations

Heat Transfer System Cleaning with SideStreamClean

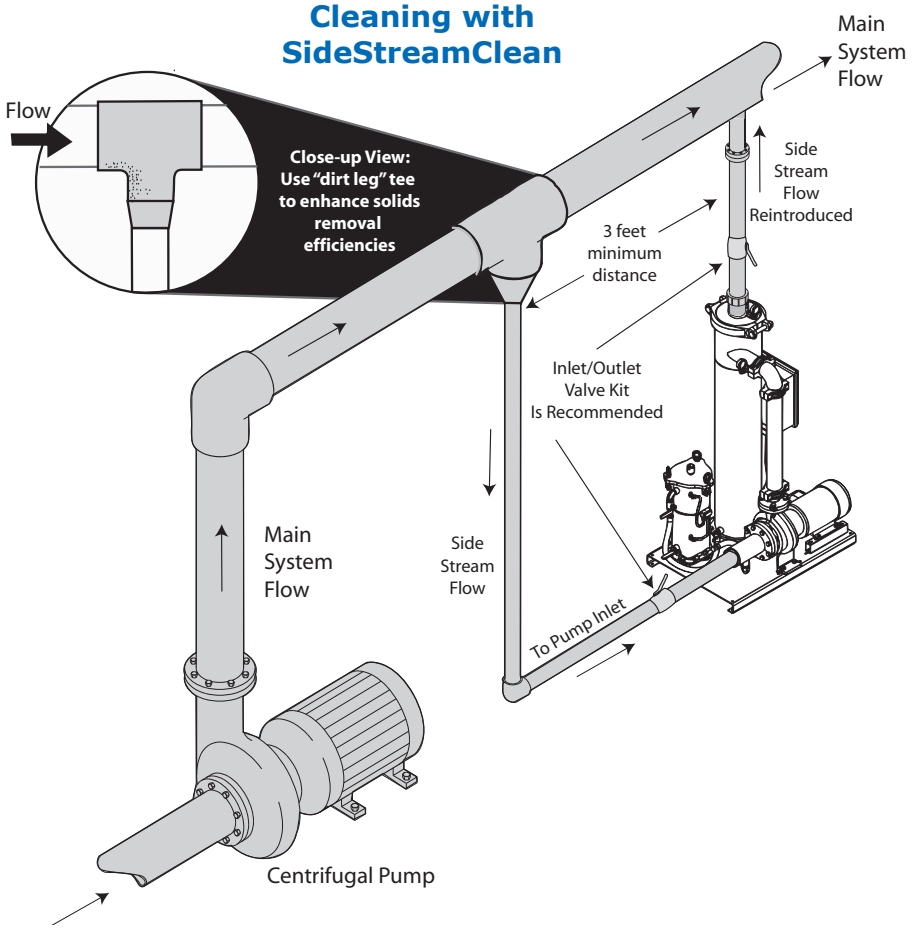

Model Selection

Special Considerations for Side Stream Applications
Sized anywhere from 5-25% of the mainstream flow (depending on the application), the appropriate SideStream unit will help control solids accumulation in a recirculating loop.

For proper model selection, determine the desired sidestream flow rate for your application and find the corresponding flow rate in the **Flow** column in the "Performance" chart on page 3. Select the model whose actual flow rate is equal to or greater than your side stream requirement.

For flow rates larger than those shown, two or more systems are needed or a custom system must be configured. Please consult the factory.

Solids Removal Chart

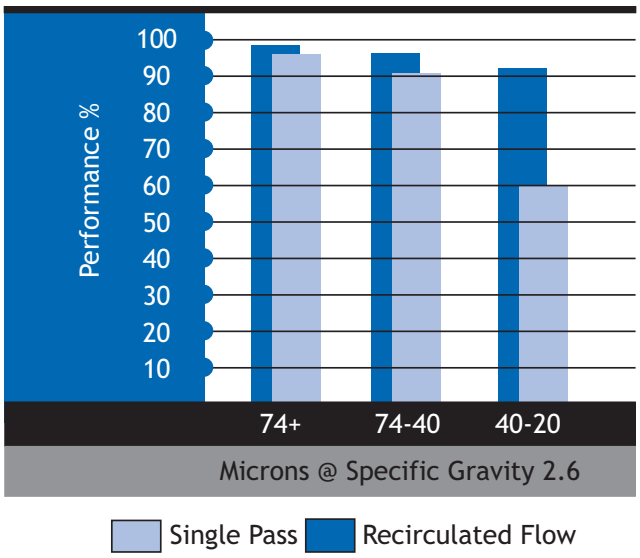

General Specifications

Performance

TBI or TBX Model	Separator Model		Flow US gpm	Flow m3/hr	Inlet (grv/flgd)	Outlet (grooved)	TBI / Weight		TBX / Weight		Pump HP	Full Load Amperage		
	TBI	TBX					Empty (lbs)	Empty (kg)	Empty (lbs)	Empty (kg)		230V	460V	575V
0030-SRV	ILB-0100	HTX-0016	30	7	1-1/2" thd	1"	307	139	320	145	1	4.2	2.1	1.7
0065-SRV	ILB-0150	HTX-0038	65	15	2" thd	1-1/2"	326	148	400	181	1.5	6	3	2.4
0100-SRV	ILB-0200	HTX-0060	100	23	3" flgd	2"	394	179	494	224	2	6.8	3.4	2.7
0145-SRV	ILB-0250	HTX-0085	145	33	3" grv	2-1/2"	518	235	637	289	3	9.6	4.8	3.9
0200-SRV	ILB-0300	HTX-0130	200	45	4" grv	3"	567	257	665	302	5	15.2	7.6	6.1
0280-SRV	ILB-0350	HTX-0200	280	64	4" grv	4"	620	281	803	364	5	15.2	7.6	6.1
0400-SRV	HTH-0285	HTX-0285	400	91	6" flgd	4"	980	455	1083	491	7.5	22	11	9
0525-SRV	HTH-0285	HTX-0285	525	119	6" flgd	4"	1086	493	1156	524	15	42	21	17
0825-SRV	HTH-0450	HTX-0450	825	187	8" flgd	6"	1528	693	1567	711	20	54	27	22
1100-SRV	HTH-0500	HTX-0500	1100	250	8" flgd	6"	1534	696	1579	716	20	54	27	22

All SideStreamClean systems are rated for 150 psi (10.3 bar) maximum pressure

NOTE: All SideStreamClean and PLUS systems do not include a pump suction strainer.

Dimensions

TBI/TBX Model	Dim A		Dim B		Dim E - TBI		Dim E - TBX	
	Inches	mm	Inches	mm	Inches	mm	Inches	mm
0030-SRV	39 3/4	1010	24	610	44 5/16	1125	46 1/8	1172
0065-SRV	39 3/4	1010	24	610	44 1/16	1119	46 1/8	1172
0100-SRV	39 3/4	1010	24	610	47	1194	48 1/8	1222
0145-SRV	39 3/4	1010	28	711	47 1/2	1207	49 1/4	1251
0200-SRV	39 3/4	1010	28	711	50 1/2	1283	51 1/4	1302
0280-SRV	39 3/4	1010	28	711	62	1575	67 1/16	1703
0400-SRV	48	1219	30	762	69 7/16	1764	69 7/16	1764
0525-SRV	48	1219	30	762	69 7/16	1746	69 7/16	1764
0825-SRV	60	1524	36	914	85	2159	85 1/16	2161
1100-SRV	60	1524	36	914	85	2159	85 1/16	2161

SideStreamClean

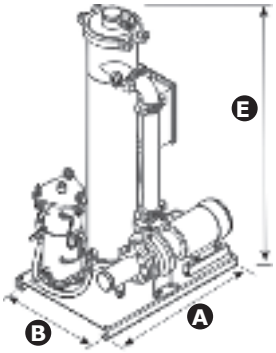

More detailed CAD drawings and CSI specifications are available at www.lakos.com

LAKOS Separators: How It Works

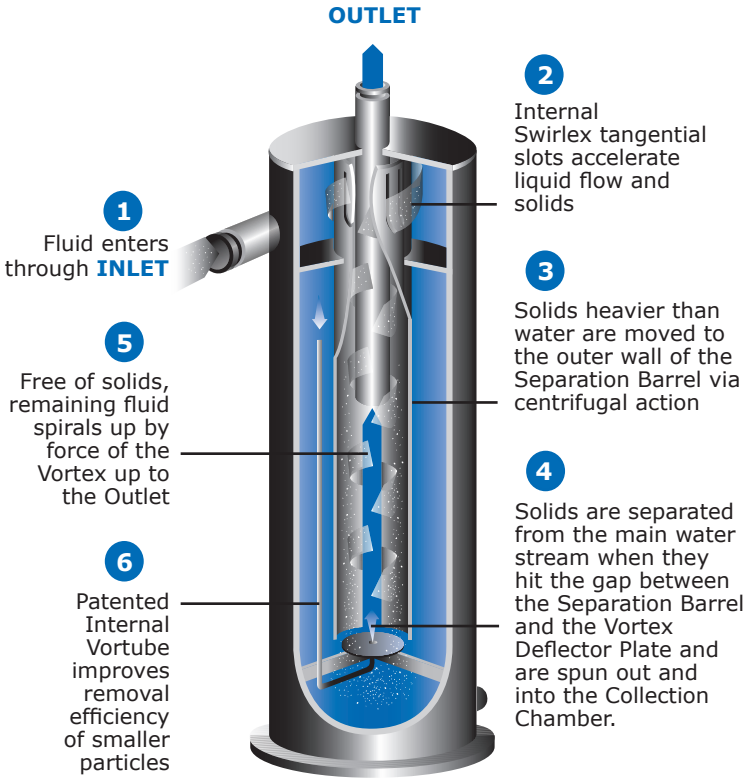

System Components

- LAKOS Separator (different units for different configurations, see "Performance" chart above)
- Centrifugal Pump w/Buna/ceramic seals, rated for 50' TDH (nominal)
- LAKOS Solids Recovery Vessel (SRV) with Indicator Package (SRI)
- Inlet/Outlet Pressure Gauges
- Fully Assembled On A Skid
- All Interconnecting Piping and Valves
- UL Listed/NEMA 4X Motor Starter and Controls

Optional Equipment:

- Inlet/Outlet Valve Kit (Recommended)
- Dry Electrical Contact (DEC) for Solids Recovery Vessel
- Motorized Ball Valve or Fail-Safe Valve (in place of Solids Recovery Vessel) for Automated Purging
- PLC (programmable logic controller)
- Premium Efficiency Motor
- Pump Basket Strainer (not installed)
- International voltages and 50 Hz
- Higher pressures available

SideStreamClean*Plus*

Filters solids down to .35 micron

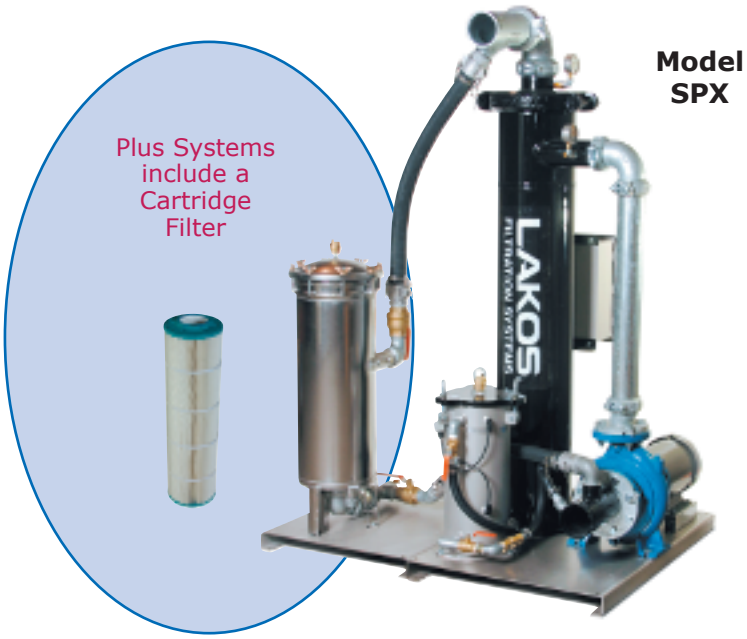

Includes Models SPI and SPX
SPX Models are accessible separators

Conversion Kits

Kits to convert a SideStreamClean system to a SideStreamCleanPLUS include a single or dual cartridge filter system on a skid (shown below) and instructions for conversion.

TBI/TBX Model	Conversion Kit
TBI/TBX-0065	PLUS-0065-TB/TC
TBI/TBX-0100	PLUS-0100-TB/TC
TBI/TBX-0145	PLUS-0145-TB/TC
TBI/TBX-0200	PLUS-0200-TB/TC
TBI/TBX-0280	PLUS-0280-TB/TC
TBI/TBX-0400	PLUS-0400-TBI/TBX
*TBI/TBX-0525	PLUS-0525-TBI/TBX
*TBI/TBX-0825	PLUS-0825-TBI/TBX
*TBI/TBX-1100	PLUS-1100-TBI/TBX

*Dual cartridge filters

Dimensions

SPI or SPX	Dim A		Dim B		Dim C		Dim D		Dim E - SPI		Dim E - SPX	
Model	Inches	mm	Inches	mm	Inches	mm	Inches	mm	Inches	mm	Inches	mm
0065-SRV	39 3/4	1010	48	1219	24	610	24	610	47 15/16	1218	50	1271
0100-SRV	39 3/4	1010	48	1219	24	610	24	610	51 15/16	1319	54 1/2	1384
0145-SRV	39 3/4	1010	52	1321	24	610	24	610	53 1/2	1359	55 3/8	1407
0200-SRV	39 3/4	1010	52	1321	24	610	24	610	56 1/2	1435	57 3/8	1457
0280-SRV	39 3/4	1010	52	1321	28	711	24	610	69 1/4	1759	74 1/16	1891
0400-SRV	48	1219	54	1372	28	711	24	610	76 11/16	1948	76 11/16	1948
*0525-SRV	48	1219	54	1372	39 3/4	1010	24	610	76 11/16	1948	76 11/16	1948
*0825-SRV	60	1524	60	1524	39 3/4	1010	24	610	93 5/8	2378	93 5/8	2378
*1100-SRV	60	1524	60	1524	39 3/4	1010	24	610	93 5/8	2378	93 5/8	2378

*Dual cartridge filters

SideStreamCleanPLUS

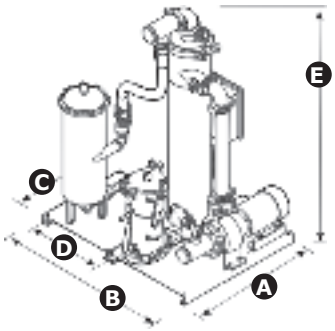

Performance

SPI or SPX	Separator Model		Flow	Flow	Cartridge *		Inlet	Outlet	SPI / Weight		SPX / Weight		Pump	Full Load Amperage		
Model	SPI	SPX	US gpm	m3/hr	Flow US gpm	Flow m3/hr	(grv/flgd)	(grooved)	Empty (lbs)	Empty (kg)	Empty (lbs)	Empty (kg)	HP	230V	460V	575V
0065-SRV	ILB-0150	HTX-0038	65	15	10	2.3	2" grv	1-1/2"	650	295	566	257	1.5	4	2	1.7
0100-SRV	ILB-0200	HTX-0060	100	23	20	4.5	3" grv	2"	685	310	646	293	2	5.3	2.7	2.2
0145-SRV	ILB-0250	HTX-0085	145	33	30	6.8	3" grv	2-1/2"	673	305	800	363	3	8.3	4.2	3.4
0200-SRV	ILB-0300	HTX-0130	200	45	30	6.8	3" grv	3"	726	329	833	378	5	13.7	6.8	5.5
0280-SRV	ILB-0350	HTX-0200	280	64	50	11.4	4" grv	4"	813	369	987	448	5	13.7	6.8	5.5
0400-SRV	HTH-0285	HTX-0285	400	91	50	11.4	6" flgd	4"	1191	540	1293	587	7.5	20.3	10.1	8.1
0525-SRV	HTH-0285	HTX-0285	525	119	90	20.4	6" flgd	4"	1446	656	1533	695	15	38	18.9	15.3
0825-SRV	HTH-0450	HTX-0450	825	187	90	20.4	8" flgd	6"	1926	874	1990	903	20	49	24.7	19.7
1100-SRV	HTH-0500	HTX-0500	1100	250	90	20.4	8" flgd	6"	1933	877	1996	905	20	49	24.7	19.7

* Cartridge filters available in 0.35, 1, 5 and 10 micron sizes

All SideStreamCleanPLUS systems are rated for 150 psi (10.3 bar) maximum pressure

LAKOS®
Separators and Filtration Solutions

1365 North Clovis Avenue
Fresno, California 93727
info@lakos.com

www.lakos.com

LAKOS is the recognized leader in solids removal from liquids in the Heat Transfer Industry. With the most complete line of filtration, including separators, media and cartridge filtration, LAKOS can provide you with the best filtration solutions to your fouling problems. Choose LAKOS for customized solutions to your filtration needs.

Lakos Separators are manufactured and sold under one or more of the following U.S. Patents: 5,320,747; 5,338,341; 5,368,735; 5,425,876; 5,571,416; 5,578,203; 5,622,545; 5,653,874; 5,894,995; 6,090,276; 6,143,175; 6,167,960; 6,202,543; 7,000,782; 7,032,760 and corresponding foreign patents, other U.S. and foreign patents pending.

Form LS-715F (Rev. 4/12)