High performance liquid-solids separation systems

HTX

Exclusive internal acceleration creates maximum performance to achieve maximum protection of fluid handling systems from unwanted solids (see illustration inside for details). Its advanced & patented design, building upon the performance LAKOS is known for, now also removes 50% more of the finer solids (< 40 microns), resulting in higher aggregate solids removal. Independently tested. Proven superior for today's demanding filtration requirements. For settlable solids only.

- Trouble-free operation & advanced purging/solids-handling concepts keep fluids clean and concentrate separated solids
- No screens or filter elements to clean or replace; no messy servicing routines
- No backwashing; zero fluid loss options
- Low & steady pressure loss
- Choice of profiles to accommodate space/piping limitations
- Rigid couplings for fast and easy internal access
- Swirlex internal accelerating slots for optimum solids-removal performance; patented
- Vortube for enhanced solids separation/collection; patented
- Optional solids handling package without liquid loss or excessive piping
- Grooved inlet/outlet connections for easy installation
- In-line inlet/outlet configuration for simplified piping (low-profile models only)
- Unishell construction for easy installation
- Optional material construction & ASME code

Flow range:
16 - 12,750 U.S. gpm
(4 - 2895 m^3/hr) per unit

Maximum standard pressure rating:
150 psi (10.3 bar)

How-it-Works Illustration

Model Specifications

Installation & Operating Instructions

Maintenance & Purging

Engineering Specifications

LAKOS is a proud member of ASHRAE, BOMA and the U.S. Green Building Council

LAKOS®
Separators and Filtration Solutions

Solids Removal Chart

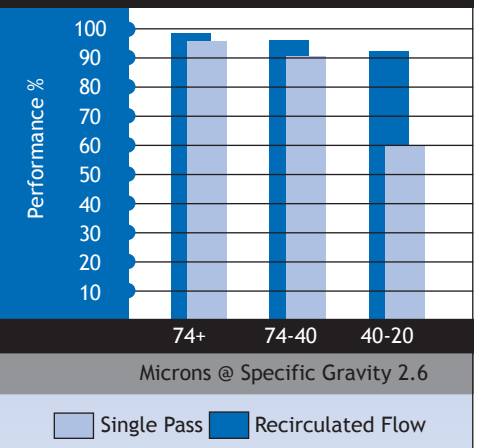

How It Works

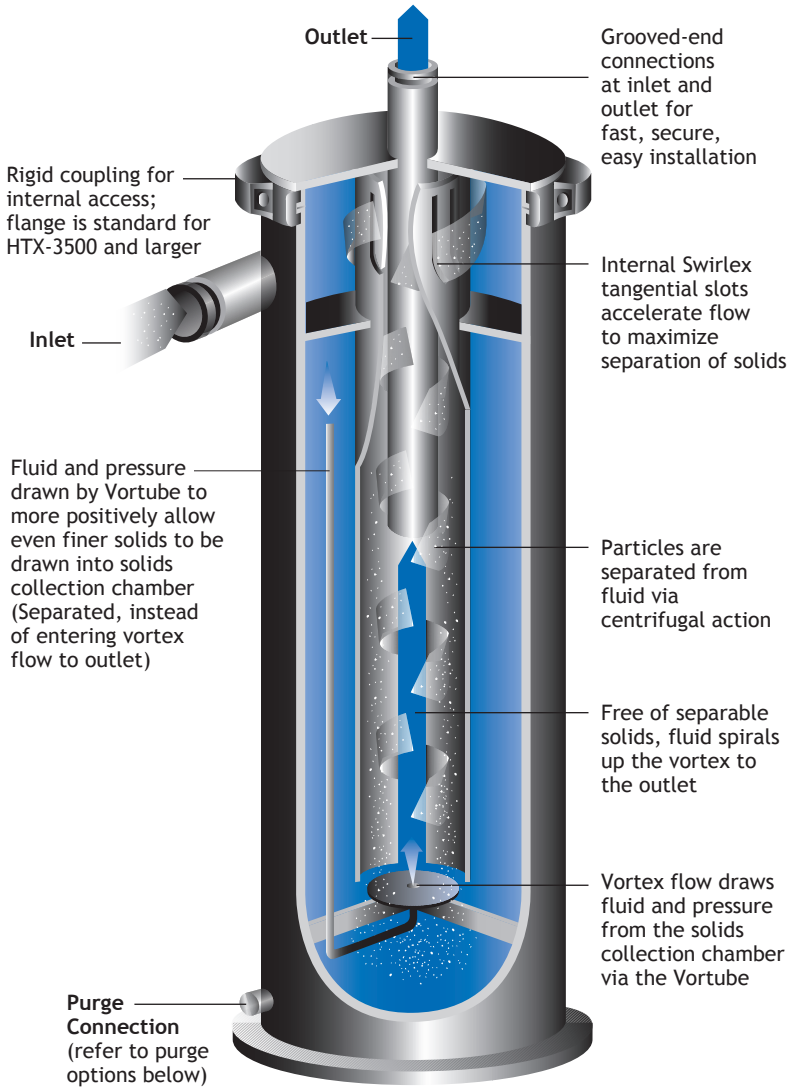

ABV Purge Option

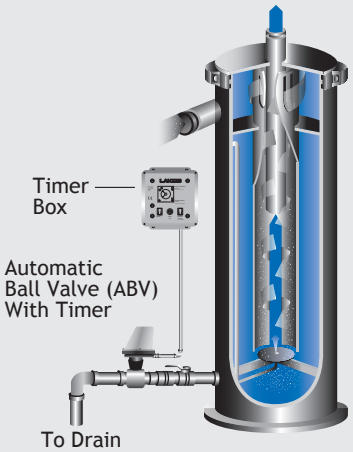

SRV Purge Option

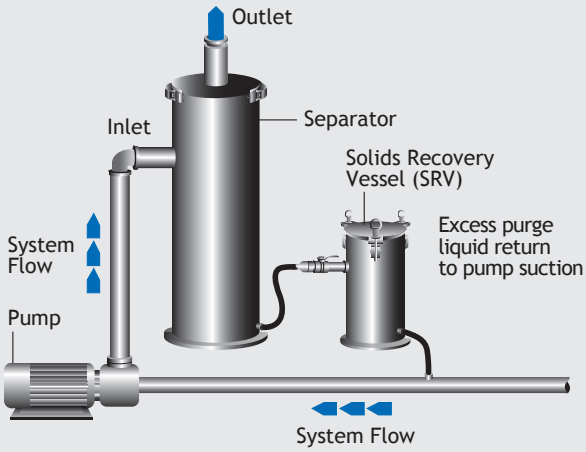

Lakos Separators are manufactured and sold under one or more of the following U.S. Patents: 5,320,747; 5,338,341; 5,368,735; 5,425,876; 5,571,416; 5,578,203; 5,622,545; 5,653,874; 5,894,995; 6,090,276; 6,143,175; 6,167,960; 6,202,543; 7,000,782; 7,032,760 and corresponding foreign patents, other U.S. and foreign patents pending.

Specifications

Model*	Flow Range U.S. gpm	Flow Range m³/hr	Inlet/Outlet Grooved Coupling**	Purge Size Male N.P.T.	Collection Chamber Capacity gal	Collection Chamber Capacity liters	Weight lbs	Weight kg	Weight with Water lbs	Weight with Water kg
HTX-0016	16-30	4 -7	1"	3/4"	0.2	0.8	45	20	57	26
HTX-0028	28-45	7-10	1-1/4"	3/4"	0.5	1.8	69	31	89	40
HTX-0038	38-65	9-15	1-1/2"	3/4"	0.7	2.8	92	42	124	56
HTX-0060	60-100	14-23	2"	3/4"	1.4	5.4	160	73	233	106
HTX-0085	85-145	19-33	2-1/2"	3/4"	1.4	5.4	202	92	295	134
HTX-0130	130-225	30-51	3"	3/4"	1.5	5.6	214	97	302	137
HTX-0200-L HTX-0200-V	200-325	45-74	4"	3/4"	1.0 2.6	3.8 9.8	408 381	185 173	595 568	270 258
HTX-0285-L HTX-0285-V	285-525	65-120	4"	1-1/2"	2.1 5.4	7.9 20.5	476 420	216 191	751 659	340 299
HTX-0450-L HTX-0450-V	450-825	102-187	6"	1-1/2"	2.8 6.7	10.6 25.4	634 593	288 269	1048 962	476 436
HTX-0500-L HTX-0500-V	500-1100	114-250	6"	1-1/2"	2.8 6.7	10.6 25.4	642 600	291 272	1056 969	479 439
HTX-0810-L HTX-0810-V	810-1670	184-379	8"	1-1/2"	6.2 12.5	23.5 47.3	760 786	345 357	1532 1423	695 645
HTX-1275-L HTX-1275-V	1275-3100	290-704	10"	2"	11.5 24.0	43.5 90.8	1064 1092	483 495	2563 2478	1163 1124
HTX-1950-L HTX-1950-V	1950-4350	443-988	12"	2"	15.0 31.5	56.8 119.2	1351 1312	613 595	3345 3163	1517 1435
HTX-3500-L HTX-3500-V	3500-6800	795-1545	16"	2"	50.6 99.3	191.5 375.9	4360 4020	1978 1823	10459 9591	4744 4350
HTX-6700-L HTX-6700-V	6700-12750	1522-2895	20"	2"	81.0 162.3	306.6 614.4	7901 7475	3584 3391	18106 16866	8213 7650

*Models ending with "L" are low profile; "V" for vertical profile

**Inlet/Outlet may also be specified with ANSI flanges, DIN flanges, BSP threads or JIS threads

Maximum pressure rating: 150 psi (10.3 bar); consult factory for higher pressure requirements

Pressure loss range: 3 - 12 psi (.2 - .8 bar)

Maximum particle size: HTX - 0016 – .25 inch (6 mm); all other models – .375 inch (9 mm)

Material (standard carbon steel): Domes – A 285C/516 GR70, .25 (6 mm) minimum thickness

Other parts – A - 36, A - 53B or other quality grade, .25 (6 mm) minimum thickness

Paint coating: Acrylic urethane, spray-on black

Flow vs. Pressure Loss

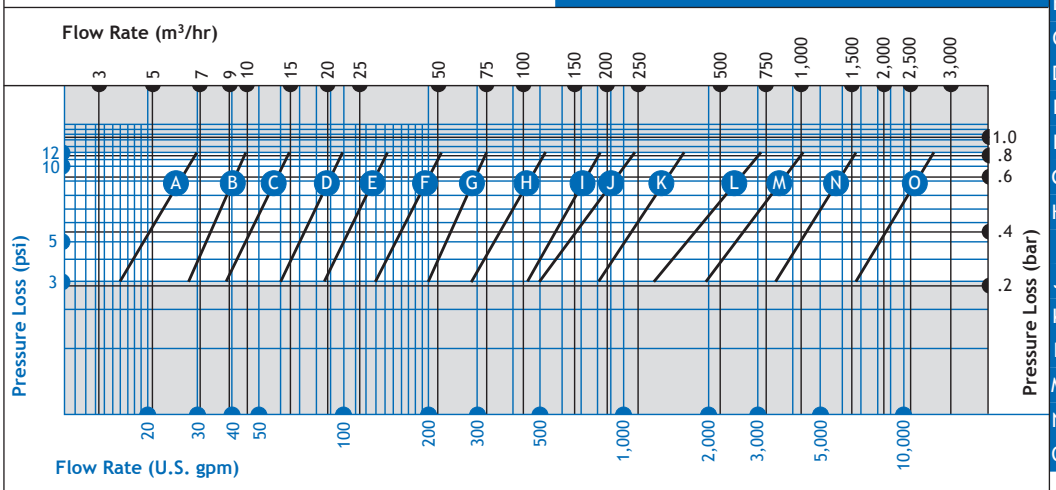

A HTX-0016
B HTX-0028
C HTX-0038
D HTX-0060
E HTX-0085
F HTX-0130
G HTX-0200
H HTX-0285
I HTX-0450
J HTX-0500
K HTX-0810
L HTX-1275
M HTX-1950
N HTX-3500
O HTX-6700

Maintenance/Purging

1. LAKOS HTX Separators must be purged regularly to remove the separated solids from the temporary collection chamber.

2. All purge hardware should be installed prior to any elbows or turns in the purge piping. Avoid "uphill" purging, which can clog purge piping and hinder effective solids evacuation.

3. For best results, purging is recommended while the LAKOS Separator is in operation, utilizing system pressure to enhance solids evacuation.

4. LAKOS provides a full selection of rugged, durable automatic purging and solids-handling systems to optimize the performance of your separation system.
CAUTION: Economy-type valves typically fail prematurely in the harsh/abrasive environment of solids purging.

5. Be sure to include an isolation valve prior to the automatic valve (available from LAKOS at an additional cost) in order to facilitate servicing of the automatic valve without system shutdown.

6. Internal Access Feature:
To inspect or clear an unusual blockage in the upper chamber, interrupt flow to the LAKOS Separator and relieve pressure (via the purge valve). Remove the spool from the separator's outlet (or, if no spool has been installed, disconnect and remove piping on the outlet) to make space for removing the separator's upper section. Disconnect the rigid coupling or flange and carefully pull out the separator's vortex outlet assembly. Inspect or clean the inlet chamber as necessary. Lubricate the coupling's seal before re-installing the vortex assembly. Re-install piping and gaskets as necessary.

Installation Instructions

1. LAKOS HTX Separators are shipped on skids or in wooden crates. Support legs (when applicable) are detached for shipping. A large ring, located on the unit's side or upper chamber, is provided for hoisting as necessary.

2. A suitable foundation is necessary to accommodate the LAKOS Separator's weight including liquid (see data, page 3). Anchor bolts are recommended in the base of the legs (low profile) or skirt (vertical profile).

3. Prior to installation, inspect the inlet/outlet/purge connections for foreign objects incurred during shipping/storage.

4. Inlet/outlet pipe connections to the LAKOS Separator should be a straight run of at least five pipe diameters to minimize turbulence and enhance performance.

5. Proper purge hardware and/or solids-handling equipment is required to flush separated solids from the separator (see details, page 2).

6. All LAKOS Separators operate within a prescribed flow range (see data, page 3). Pipe size is not a factor in model selection. Use appropriate hardware to match the inlet/outlet size. Grooved couplings are not included with the separator. Optional flanged connections are available upon request.

7. Inlet pressure to the LAKOS Separator must be at least equal to or greater than the anticipated pressure loss through the separator (see pressure loss chart, page 3) plus 15 psi (1 bar) plus whatever downstream pressure is required.

8. Pressure gauges are required at both the inlet and outlet of the separator in order to monitor pressure loss and proper system flow (see "Flow vs. Pressure Loss" chart, page 3). Gauge kit available from LAKOS at additional cost. If separator operates with an open discharge, a valve should be installed to create a back pressure of at least 5 psi (.3 bar).

9. Winterizing is important if the LAKOS Separator is to remain idle in freezing temperatures. Drain liquid as necessary to avoid expansion of water to ice and related damages.

Low Flow Rates

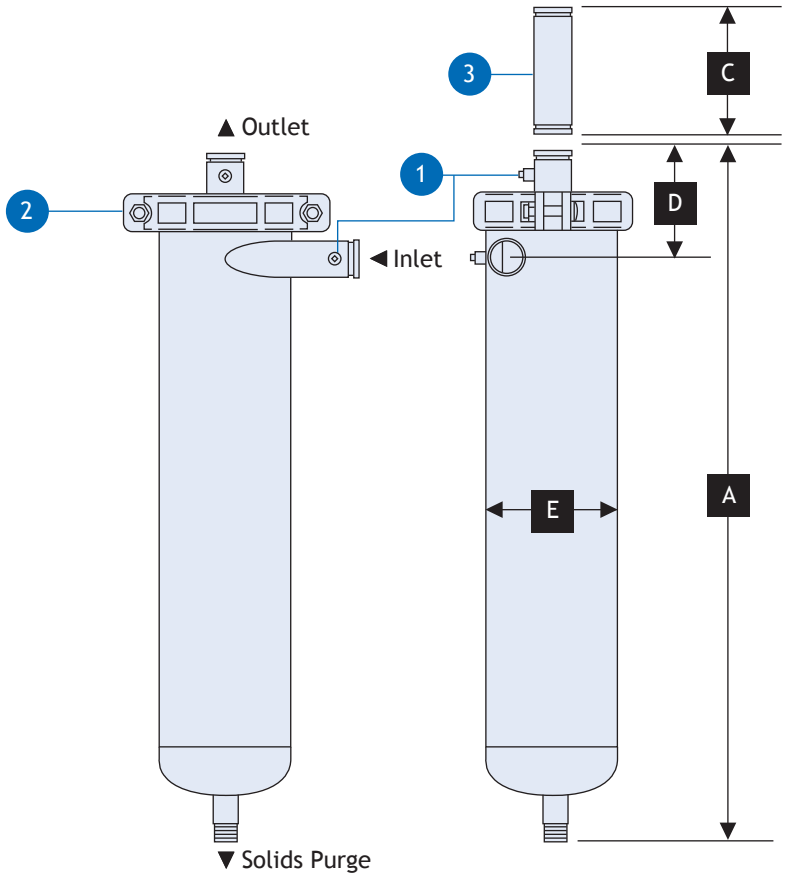

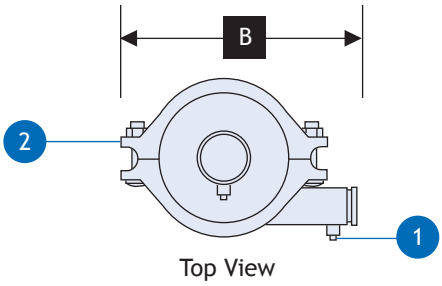

1 **Inlet/Outlet Pressure Gauge Taps**

1/4-inch NPT female; required at both inlet and outlet for proper flow verification; optional kit available, including inlet/outlet pressure gauges with petcock valves and a manual isolation valve for the purge connection

2 **Rigid Coupling Connection**

Provides for complete access to the upper chamber, acceleration slots and internal separation barrel; 2-piece

3 **Connection Spool**

When removed, provides space for accessing internals of separator via rigid coupling. Not included with separator, available separately

Note: These units may also be specified with optional support skirt or legs. Consult factory for details.

Dimensions

Model	A		B		C		D		E	
	in	mm	in	mm	in	mm	in	mm	in	mm
HTX-0016	33-3/16	843	9-13/16	249	7	178	7-15/16	202	4-1/2	114
HTX-0028	35	889	12-5/16	313	7	178	8-1/16	205	5-9/16	141
HTX-0038	37-9/16	954	12-1/2	318	8	203	8-1/8	206	6-5/8	168
HTX-0060	46-13/16	1189	15-3/4	400	11	279	8-1/8	206	8-5/8	219
HTX-0085	54-5/8	1387	15-3/4	400	15	381	9-5/8	244	8-5/8	219
HTX-0130	57-3/4	1467	15-3/4	400	16	406	10-1/2	267	8-5/8	219

Dimensions for reference only. Consult factory when pre-plumbing.

High Flow Rates

Inlet/Outlet Pressure Gauge Taps (1)

1/4-inch NPT female; required at both inlet and outlet for proper flow verification; optional kit available including inlet/outlet pressure gauges with petcock valves and a manual isolation valve for the purge connection

Inspection/Drain Plug (2)

1/2-inch NPT female; provides access to upper chamber for inspection of slot area; also allows for draining the upper chamber if necessary

Rigid Coupling Connection (3)

Provides for complete access to the upper chamber, acceleration slots and internal separation barrel; model HTX-3500 and larger uses flange

Lifting Ring (4)

For installation purposes

Connection Spool (5)

When removed, provides space for accessing internal of separator via rigid coupling. Not included with separator, available separately

Hand-Hole Inspection Port (6)

Provides access to collection chamber

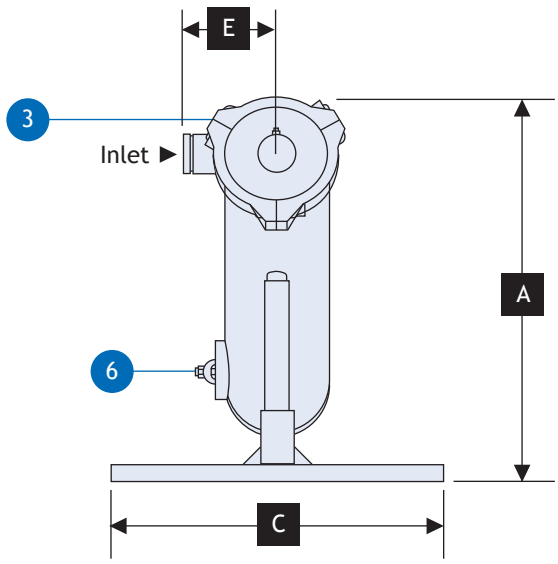

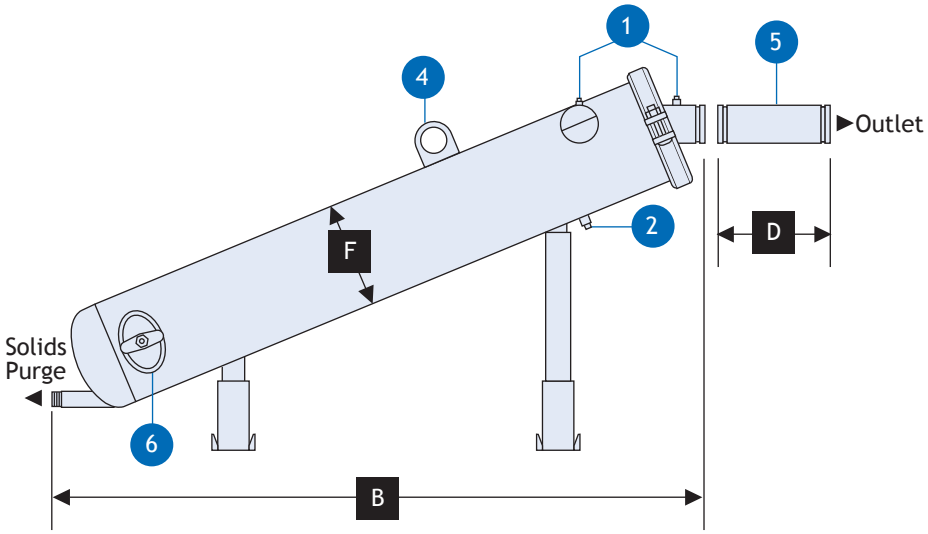

Dimensions

Model	A		B		C		D		E		F	
	in	mm	in	mm	in	mm	in	mm	in	mm	in	mm
HTX-0200-L	40-11/16	1033	64-3/4	1645	40	1016	21	533	11	279	10-3/4	273
HTX-0285-L	44	1118	70-1/16	1780	40	1016	21	533	11	279	12-3/4	324
HTX-0450-L	51-1/2	1308	85-1/16	2161	40	1016	24	610	12	305	14	356
HTX-0500-L	51-1/2	1308	85-1/16	2161	40	1016	24	610	12	305	14	356
HTX-0810-L	57-5/16	1456	92-7/8	2357	40	1016	30	762	14	356	18	457
HTX-1275-L	72-7/16	1840	118-13/16	3018	40	1016	33	838	18	457	22	559
HTX-1950-L	79-5/8	2022	130-3/4	3321	40	1016	38	965	18	457	24	610
HTX-3500-L	111-3/4	2838	189-1/2	4813	60	1524	51	1295	26	660	36	914
HTX-6700-L	131-3/4	3346	226-9/16	5755	60	1524	60	1524	30	762	42	1067

Dimensions for reference only.
Consult factory when pre-plumbing.

High Flow Rates

Vertical Profile

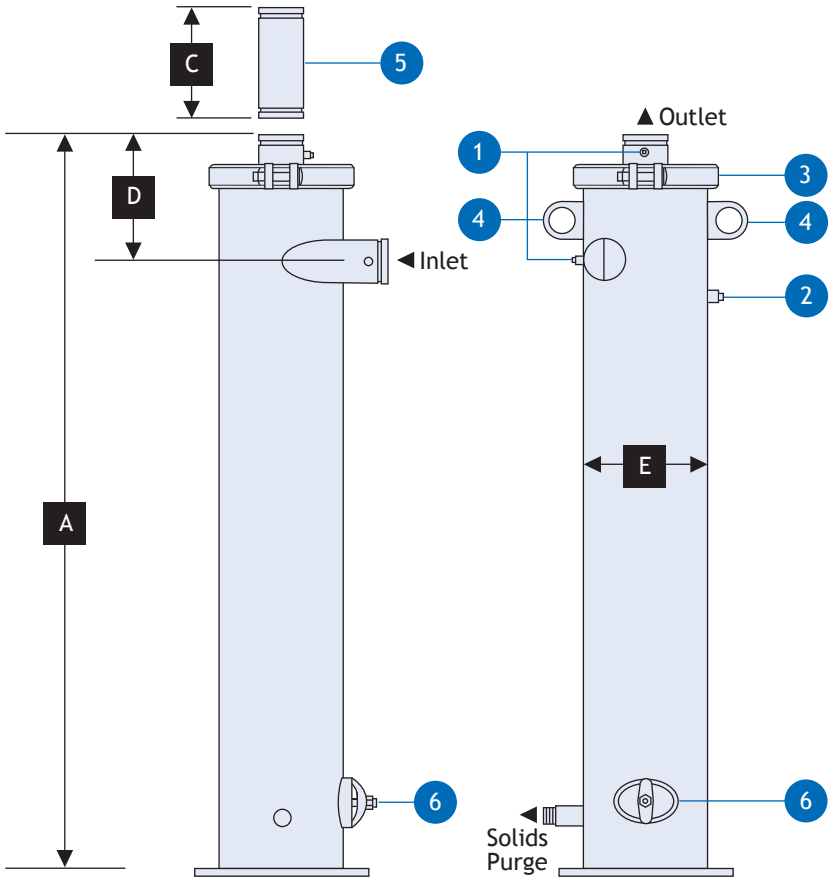

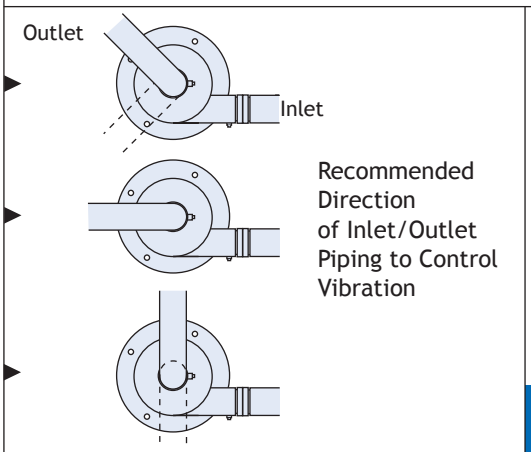

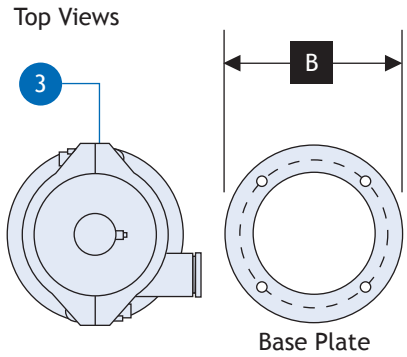

1 Inlet/Outlet Pressure Gauge Taps

1/4-inch NPT female; required at both inlet and outlet for proper flow verification; optional kit available, including inlet/outlet pressure gauges with petcock valves and a manual isolation valve for the purge connection

2 Inspection/Drain Plug

1/2-inch NPT female; provides access to upper chamber for inspection of slot area; also allows for draining the upper chamber if necessary

3 Rigid Coupling Connection

Provides for complete access to the upper chamber, acceleration slots and internal separation barrel; model HTX-3500 and larger uses flange

4 Lifting Rings

For installation purposes

5 Connection Spool

When removed, provides space for accessing internal of separator via rigid coupling. Not included with separator, available separately

6 Hand-Hole Inspection Port

Provides access to collection chamber

Dimensions

Model	A		B		C		D		E	
	in	mm	in	mm	in	mm	in	mm	in	mm
HTX-0200-V	74-1/16	1881	16	406	21	533	11-3/4	298	10-3/4	273
HTX-0285-V	66-9/16	1691	18	457	21	533	14-3/16	360	12-3/4	324
HTX-0450-V	82-5/16	2091	20	508	24	610	13-3/8	340	14	356
HTX-0500-V	82-5/16	2091	20	508	24	610	13-3/8	340	14	356
HTX-0810-V	91	2311	26	660	30	762	16-7/16	418	18	457
HTX-1275-V	117-3/16	1365	30	762	33	838	18-1/2	470	22	559
HTX-1950-V	129-7/8	3299	32	813	38	965	18-11/16	475	24	610
HTX-3500-V	184-1/16	4675	42	1067	51	1295	39-1/8	994	36	762
HTX-6700-V	220-1/4	5594	52	1321	60	1524	42	1067	42	1067

Dimensions for reference only. Consult factory when pre-plumbing.

Sample Specifications

Limited Warranty

All products manufactured and marketed by this corporation are warranted to be free of defects in material or workmanship for a period of at least one year from date of delivery. Extended warranty coverage applies as follows:

All LAKOS Separators: Five year warranty

All other components: 12 months from date of installation; if installed 6 months or more after ship date, warranty shall be a maximum of 18 months from ship date.

If a fault develops, notify us, giving a complete description of the alleged malfunction. Include the model number(s), date of delivery and operating conditions of subject product(s). We will subsequently review this information and, at our option, supply you with either servicing data or shipping instruction and returned materials authorization. Upon prepaid receipt of subject product(s) at the instructed destination, we will then either repair or replace such product(s), at our option, and if determined to be a warranted defect, we will perform such necessary product repairs or replace such product(s) at our expense.

This limited warranty does not cover any products, damages or injuries resulting from misuse, neglect, normal expected wear, chemically-caused corrosion, improper installation or operation contrary to factory recommendation. Nor does it cover equipment that has been modified, tampered with or altered without authorization.

No other extended liabilities are stated or implied and this warranty in no event covers incidental or consequential damages, injuries or costs resulting from any such defective product(s).

1365 North Clovis Avenue
Fresno, California 93727 USA
Telephone: (559) 255-1601
FAX: (559) 255-8093
www.lakos.com
info@lakos.com

Separator Type & Performance

The removal of specific unwanted solids from a pumped/pressurized fluid flow system shall be accomplished with a centrifugal-action vortex separator. Solids removal efficiency is principally predicated on the difference in specific gravity between the liquid and the solids. Fluid viscosity must be 100 SSU or less.

In a single pass through the separator, given solids with a specific gravity of 2.6 and water at 1.0, performance is expected to be 98% of 74 microns and larger. Additionally, particles finer in size, heavier by specific gravity and some lighter by specific gravity will also be removed, resulting in an appreciable aggregate removal of particles (up to 75%) as fine as 5 microns.

In a recirculating system, 98% performance is predictable to as fine as 40 microns (given solids with a specific gravity of 2.6), with correspondingly higher aggregate performance percentages (up to 90%) of solids as fine as 5 microns.

Performance Requirement

Separator performance must be supported by published independent test results from a recognized and identified test agency. Standard test protocol of upstream injection, downstream capture and separator purge recovery is allowed with 50-200 mesh particles to enable effective, repeatable results. Single-pass test performance must not be less than 95% removal. Model tested must be of the same flow-design series as specified unit.

Separator Design & Function

A tangential inlet and mutually tangential internal accelerating slots shall be employed to promote the proper velocity necessary for the removal of the separable solids. The internal accelerating slots shall be spiral-cut for optimum flow transfer, laminar action and particle influence into the separation barrel. The separator's internal vortex shall allow this process to occur without wear to the accelerating slots.

Separated particle matter shall spiral downward along the perimeter of the inner separation barrel, in a manner which does not promote wear of the separation barrel, and into the solids collection chamber, located below the vortex deflector plate.

To insure maximum particle removal characteristics, the separator shall incorporate a vortex-induced pressure relief line (Vortube), drawing specific pressure and fluid from the separator's solids collection chamber via the outlet flow's vortex/venturi effect, thereby efficiently encouraging solids into the collection chamber without requiring a continuous underflow or excessive system fluid loss.

System fluid shall exit the separator by following the center vortex in the separation barrel and spiral upward to the separator outlet.

Purging & Solids Handling

Evacuation of separated solids shall be accomplished automatically, employing a dedicated solid-state controller in a NEMA 4 housing. Available for worldwide single-phase voltages of 24VAC to 250VAC. Programming options to include a purge frequency range of every 60 seconds to every 23 hours, 59 minutes. Purge duration options range from 10 seconds to 59 minutes, 59 seconds. Non-volatile memory. Meets CSA requirements. This controller shall automatically operate one of the following techniques:

Motorized Ball Valve - An electrically-actuated valve shall be programmed at appropriate intervals and duration in order to efficiently and regularly purge solids from the separator's collection chamber. Valve body shall be bronze (optional stainless steel also available). Valve ball shall be stainless steel with teflon seat. Valve size: _____

Pneumatic Ball Valve - A fail-safe valve shall be programmed at appropriate intervals and duration in order to efficiently and regularly purge solids from the separator's collection chamber. A spring-control shall provide that this full-port valve closes in the event that compressed air or electricity is interrupted. Valve body shall be bronze (optional stainless steel also available). Valve ball shall be stainless steel with teflon seat. Valve size: _____

Solids Recovery Vessel - Separated solids shall be continuously purged under controlled flow into a vessel equipped with one (or three, depending on the model specified) 25-micron fiberfelt solids collection bag. Solids collection capacity: 360 cubic inches (6 liters). If larger vessel is specified: 1080 cubic inches (18 liters). Excess liquid shall pass through the bag and return to system flow via the system pump's suction line.

If optional Indicator Package has been specified: System also includes manual isolation valves for use when servicing the collection bag; sightglass for verification of flow through the vessel; annunciator for indicating when the collector bag needs cleaning/replacement; flow control orifice to minimize fluid volume/velocity through the vessel and collector bag; clamps, tubing and specialty piping for completing the system assembly.

Systemization *(a specified option only)*

The separator and its accessories shall be packaged as a complete system, with all componentry from a single source. In addition to the equipment already specified, the system shall also include pressure gauges with petcock valves for both the inlet and outlet of the separator and an isolation valve at the purge outlet for servicing of the automatic valve as necessary without interrupting system flow.

A connection spool shall also be included for installation on the separator's outlet to properly facilitate the separator's internal access feature.

Separator Details

A. Inlet & outlet shall be grooved connections, size: _____
B. Purge outlet shall be threaded with screw-on flange, size: _____
C. The separator shall operate within a flow range of: _____
D. Pressure loss shall be between 3-12 psi (.2 - .8 bar), remaining constant, varying only when the flow rate changes.

Separator Construction

The separator shall feature the following access capabilities for either inspection or the removal of unusual solids/debris:

- An upper-chamber full-size grooved coupling (flange for HTX-3500 and larger), allowing complete access to the inlet chamber, acceleration slots and internal separation barrel
- A hand-hole port at the collection chamber (model HTX-0285 and larger only)
- A 1/2-inch inspection/drain, located at the lowest point of the upper chamber

The separator shall be constructed of A-36, A-53B or equivalent quality carbon steel, minimum thickness of .25 inches (6.35 mm). Maximum operating pressure shall be 150 psi (10.3 bar), unless specified otherwise.

Paint coating shall be acrylic urethane, spray-on, gloss black.

As a specified option only: The separator shall be constructed in accordance with the standards of the American Society of Mechanical Engineers (ASME), Section VIII, Division 1 for pressure vessels. Certification shall be confirmed with the registered "U-stamp" on the body of the separator.

Separator Source & Identification

The separator shall be manufactured by LAKOS Filtration Systems, a division of Claude Laval Corporation in Fresno, California USA. Specific model designation is: _____

Printed on recycled paper LS-625J (Rev.11/11)

LAKOS®
Separators and Filtration Solutions